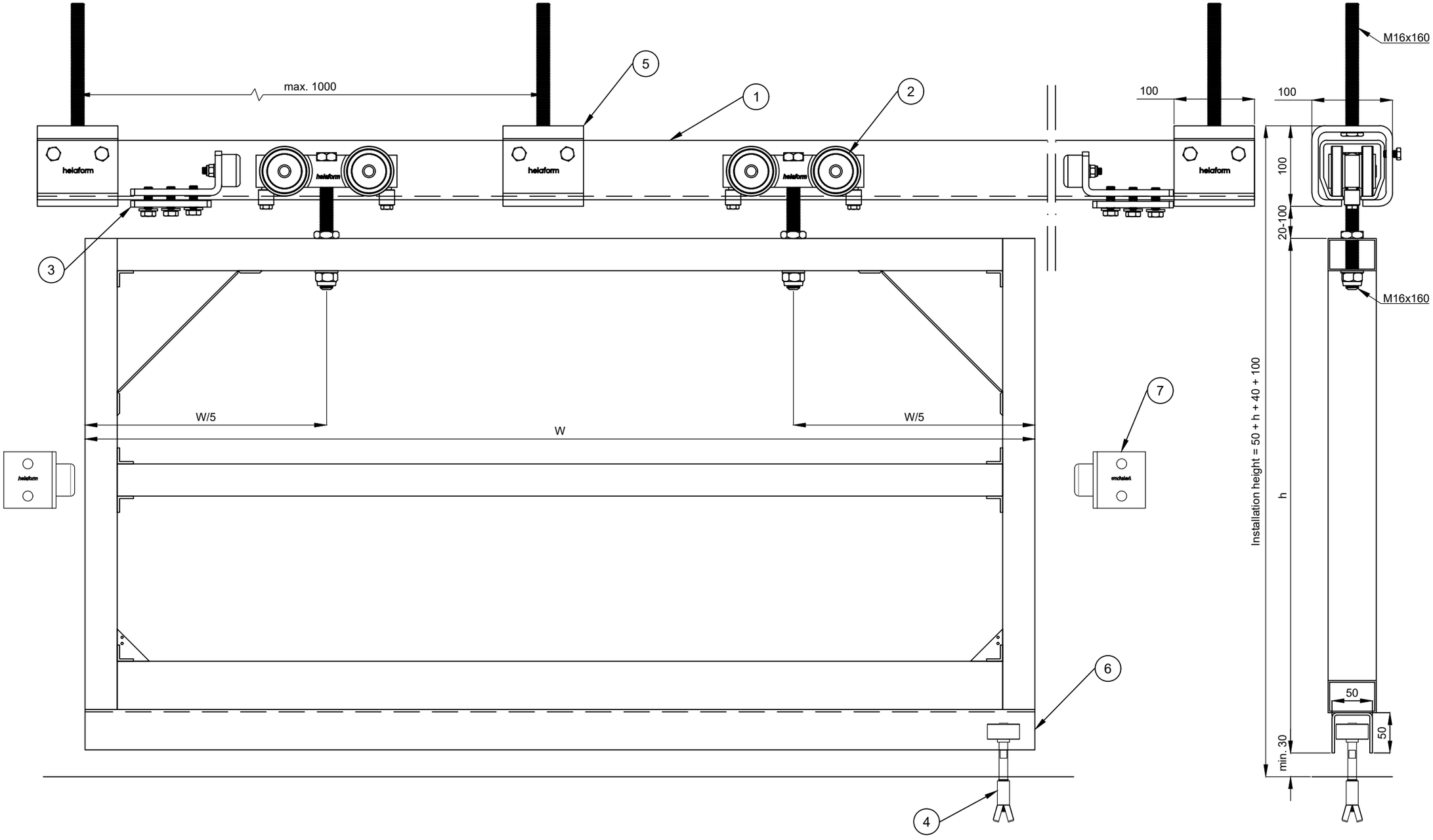

Nimike / Description	Tuotenumero / Product Nr.	Tuotesarja / Product Series	Piirtäjä / By	Mittakaava / Scale	Rev
Series 2000 (katto/soffitl): KKL/M16	(assembly K101-5)	Series 2000	AM	1:5 A3	02

1.	Track K-2000	5.	Bracket KKL-2000/M16	9.		13.	
2.	Hanger MP-2000	6.	Bottom guide channel AOK-50x50	10.		14.	
3.	Track stop KP-2000	7.	Wall stop P	11.		15.	
4.	Bottom guide UA-14	8.		12.		16.	

Huomiot / Notes

1. Drawing is for reference only and subject to change without notice.
2. All product dimensions are in millimeter.
3. Door panels (/movable objects) are not in scale.

helaform